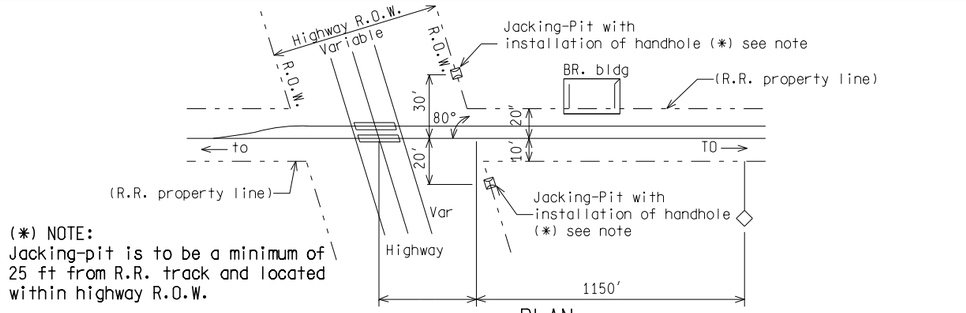

(*) NOTE:
Jacking-pit is to be a minimum of 25 ft from R.R. track and located within highway R.O.W.

PLAN

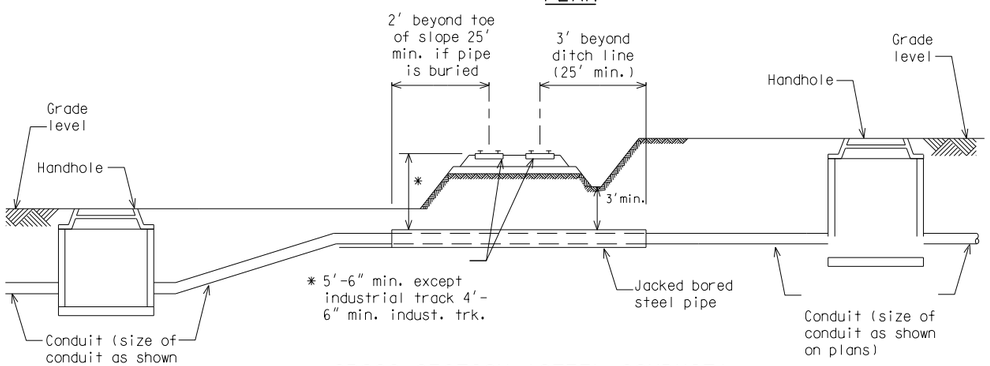

CROSS-SECTION (STEEL CONDUIT)

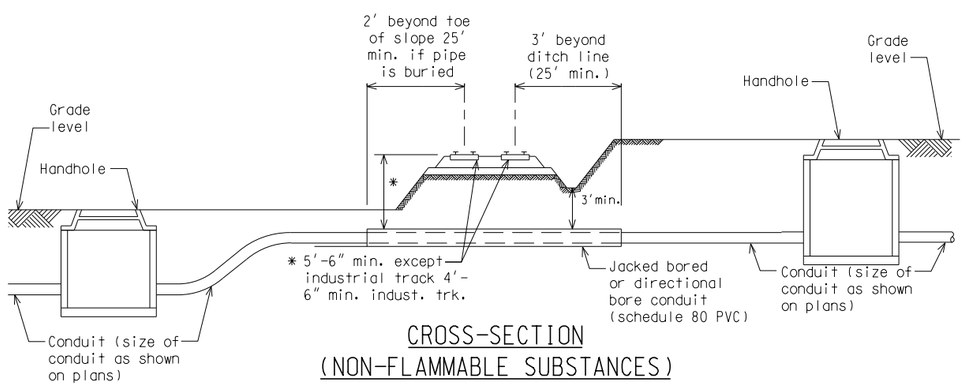

CROSS-SECTION
(NON-FLAMMABLE SUBSTANCES)

HORIZONTAL DISTANCES ARE MEASURED AT RIGHT ANGLES TO CENTERLINE OF TRACK

NOT TO SCALE

File: RefDoc/TR/Signals/Web/Sp Det/Fin/SIG250A.dgn Rev. 02/16/17

MDOT Michigan Department of Transportation

PREPARED BY
TRAFFIC AND SAFETY

DRAWN BY: DJF
CHECKED BY:

ENGINEER OF DELIVERY

ENGINEER OF DEVELOPMENT

(SPECIAL DETAIL)
FHWA APPROVAL DATE

MICHIGAN DEPARTMENT OF TRANSPORTATION
BUREAU OF HIGHWAYS DELIVERY STANDARD PLAN FOR

CONDUIT UNDER
RAILROAD TRACKS

PLAN DATE | SIG-251-A | SHEET 1 of 2

NOTES:

1) The conduit shall be installed at a min. depth of 5'-6" with reinforced bars (if required per R.R. requirements) as shown in detail and as indicated on the plans within the entire crossing of railroad R.O.W.

2) Track support devices shall be placed & removed to carry the railroad. tracks over the open trench installation with the trench properly supported with sheeting & any other supports required to complete the conduit installation within the railroad R.O.W. the extra cost of such installation shall be incidental to the encased conduit item.

3) Contractor shall contact Division Engineer of railroad before starting excavation for conduit installation.

4) Contractor shall reimburse railroad Co. for services performed by railroad Co. where required.

5) All work shall be conducted so as not to interfere with, interrupt or endanger the integrity of rail operation.

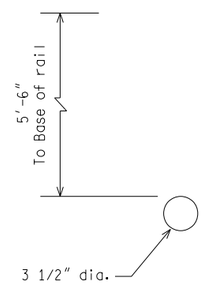

(1) 3" CONDUIT
N.T.S.

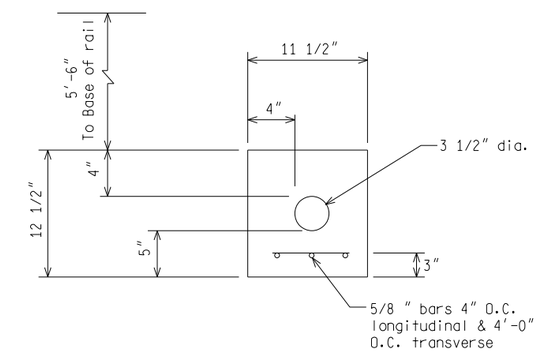

(1) 3" REINFORCED CONDUIT
N.T.S.

CONDUIT UNDER RAILROAD TRACKS

NOT TO SCALE

MICHIGAN DEPARTMENT OF TRANSPORTATION
BUREAU OF HIGHWAYS DELIVERY STANDARD PLAN

(SPECIAL DETAIL)
FHWA APPROVAL DATE

File: RefDoc/TR/Signals/Web/Sp Det/Fin/SIG250A.dgn Rev. 02/16/17

PLAN DATE | SIG-251-A | SHEET 2 of 2

AS-LET PLAN REVISIONS

NO.	DATE	AUTH	DESCRIPTION	NO.	DATE	AUTH	DESCRIPTION

MDOT Michigan Department of Transportation

FILE:

DATE:
DESIGN UNIT:
TSC:

CS:
JN:

DRAWING | SHEET